STANDARD RTD WITH HEAD & FITTING

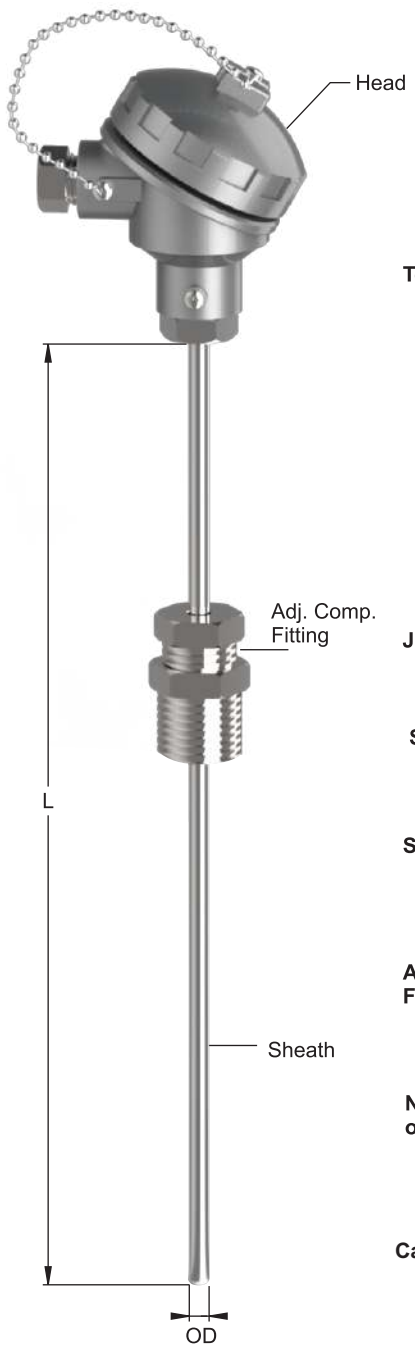

R- 101

RTD Element

1	Pt-100x1, Simplex
2	Pt-100x2, Duplex
Other	Consult Factory

Termination Style

A	Die cast Alu A TYPE
B	Die cast Alu B TYPE
C1	Die cast Alu IP-67 (Single Entry)
C2	Die cast Alu IP-67 (Double Entry)
SS	SS- Head
M	Miniature Die cast Aluminium
P	Plastic
EB1	Die cast Alu Explosion / Flame proof IIB (Zone1 & 2)
EB2	SS Explosion / Flame proof IIB (Zone1 & 2)
EC1	Die cast Alu Explosion / Flame proof IIC (T6)
EC2	SS Flame proof IIC (T6)
EC3	Die cast Alu Explosion / Flame proof IIC (T6) ATEX

Junction Style

W2	2- Wire
W3	3- Wire
W4	4- Wire

Sheath "OD"

3	Ø3mm
4.5	Ø4.5mm
6	Ø6mm
8	Ø8mm
Other	Consult Factory

Sheath Material

316	SS 316
Other	Consult Factory

Adj. Comp. Fitting

Threads B.S.P. / N.P.T.	1/4"
	1/2"
	3/4"
	3/8"
	1"
	1 1/4"
	1 1/2"
	2"
M-Thread	M20X1.5, M18X1.5, M33X2
Other	Consult Factory
N/A	Not Applicable

Nominal Length of RTD "L"(mm)

Calibration Standard

A	ANSI MC96.1
D	DIN
I	IEC